Dimensions

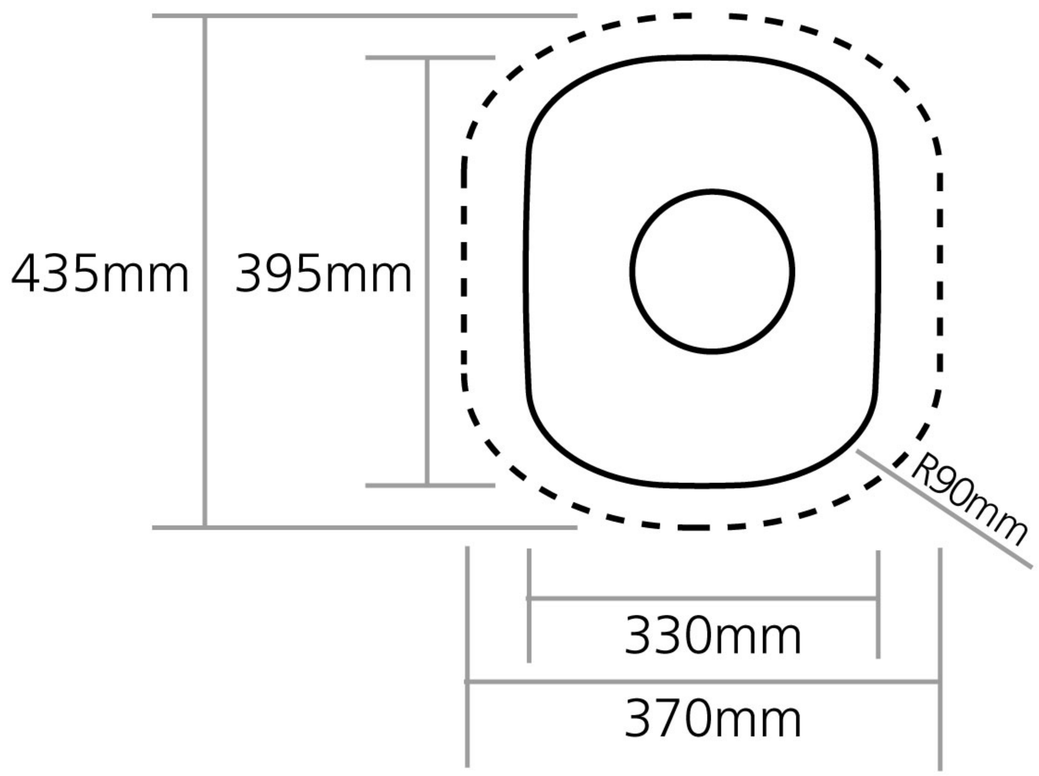

Bowl depth 180mm
Min. base unit 400mm