DIMENSIONS

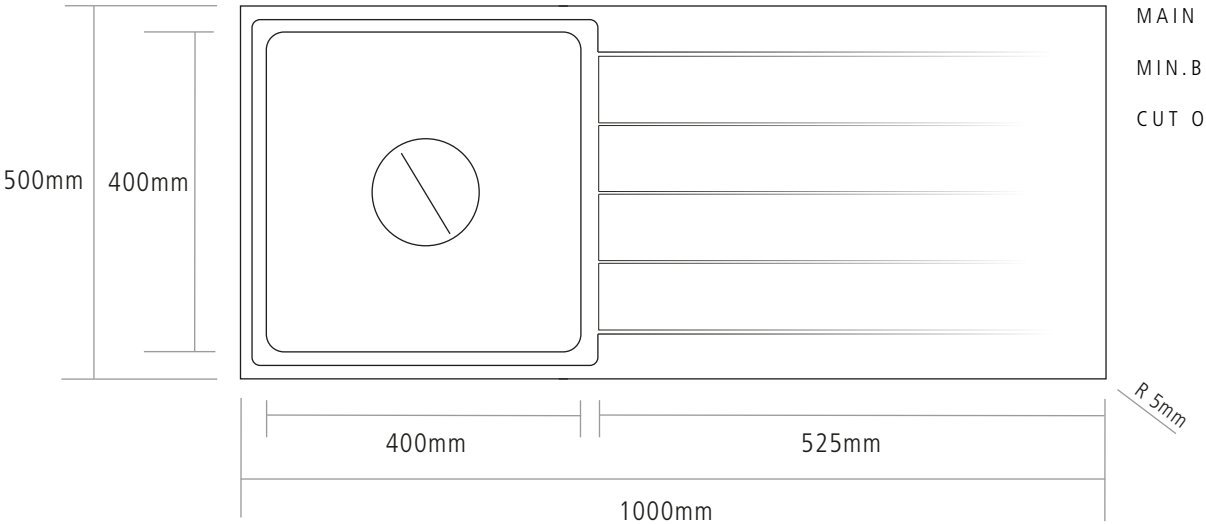

MAIN BOWL DEPTH: 195MM

MIN.BASE UNIT: 600MM

CUT OUT SIZE: 980 X 480MM